MATRIX CONSULTING ENGINEERS
1170 PACIFIC STREET
SAN LUIS OBISPO, CA 93401
PH. 805.786.4802 FX. 805.786.4817

HELIODYNE RACK SUPPLEMENTAL CALCULATIONS

for

HELIODYNE SOLAR COLLECTOR RACK STRUCTURES

FOR HELIODYNE, INC.

WISCONSIN
KEVIN T.
DEVANEY
E-41637
SAN LUIS OBISPO
CA
PROFESSIONAL ENGINEER

This calculation package is meant to supplement the *Calculation Reports for Heliodyne Solar Collector Rack Structures*. This supplement provides further detail and explanation for the capacity calculations provided in the Reports. The supplement is organized as follows:

1. Clip and Rail Capacity Analysis……..……..2

2. Rail Mounting Foot Connection Analysis……...…….....…..5

3. Aluminum Pipe Leg Capacity Calculations……...….....…..6

4. Pedestal Foot Capacity Analysis……...…...…….....…..11

5. Pedestal Foot Fastener Capacity Calculations……...…….....…..12

Clip and Rail Analysis

Analysis indicates that lateral force in the system is exclusively resolved in the front leg due to it's much greater stiffness. Loading to the rear clip and rail is easily defined since the rear leg is only required to take vertical load. The front clip and rail are required to resist combinations of horizontal and vertical loads. As such, a range of capacities based on different loading angles was determined. To determine capacities, the Solidworks FEM model for the front and rear were analyzed and adjusted to a force level that corresponds to a factored limit state stress (FLSS) per Aluminum Design Manual (ADM 2005) Section 3.4.1, as follows:

$\phi F_L = \phi_y F_{ty} = 33.25\ ksi$
Or
$\phi F_L = \phi_u F_{tu}/k_t = 32.3\ ksi$ ← Governs

Where
$\phi_y = 0.95\ and\ F_{ty} = 35\ ksi\ (6061 - T6)$
and
$\phi_u = 0.95\ , F_{tu} = 38\ ksi\ and\ k_t = 1.0\ (6061 - T6)$

Rear Leg Clip and Rail

Figure 1 shows the loading for the rear clip and rail and Table 1 shows the corresponding stress.

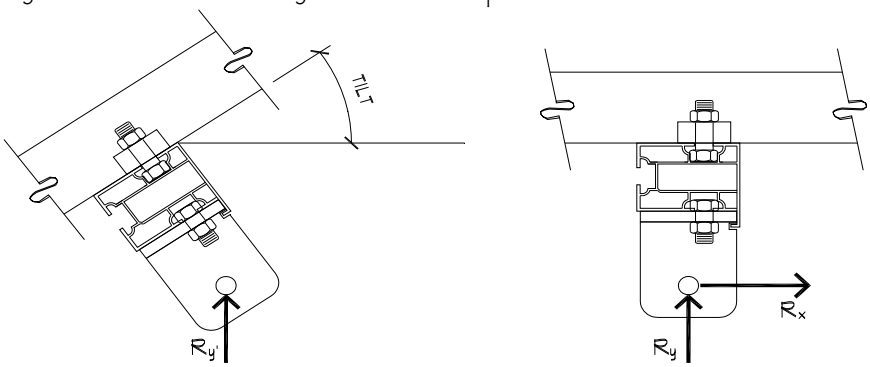

a) Actual Orientation b) Corresponding Analysis Orientation

Figure 1. Rear Leg Assembly loading

Table 1. Rear Assembly Capacity

Tilt (degrees)	Load Direction	$R_{y'}$ (lb)	R_x (lb)	R_y (lb)	Max Stress (ksi)
35	Tension	-630	-361	-516	32.3
35	Compression	1274	731	1044	32.1
45	Tension	-571	-404	-404	32.3
45	Compression	721	510	510	31.9

Front Leg Clip and Rail

Figure 2 shows the loading concept for the front clip and rail; Figure 3 shows the loading matrix for the range of loads. The values shown on the arrows are the load at which the maximum stress equals or nears the FLSS. Table 2 shows the corresponding maximum node stress on the model at the applied load, and which load cases apply for which range. Figure 4 shows a sample stress state of the model for the "E" case. Figure 5 shows the corresponding plot of node stresses.

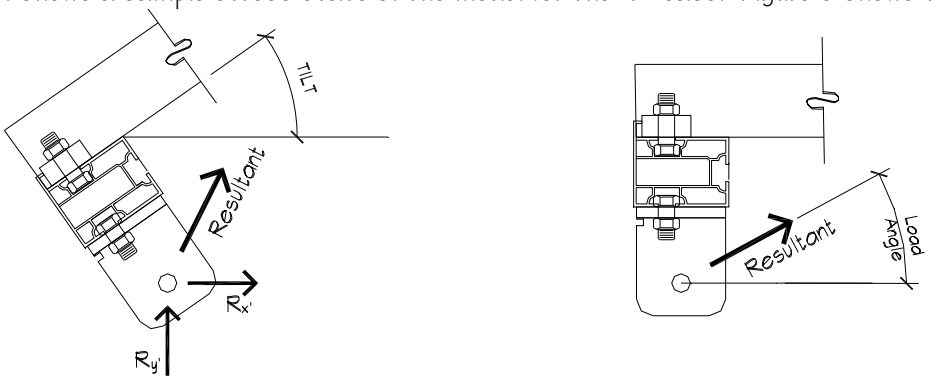

a) Actual Orientation

b) Corresponding Analysis Orientation

Figure 2. Front Leg Assembly loading

Table 2. Front Assembly Capacity

Load Angle	Load Case	Resultant (lb)	Max Stress (ksi)
0-40	D1	600	31.8
40-85	C	690	31.7
85-95	A1	1300	28.1
95-140	G	529	31.9
140-180	D2	260	31.9
180-265	F	245	32
265-275	B2	454	30.5
275-325	E	640	31.7
325-360	D1	600	31.8

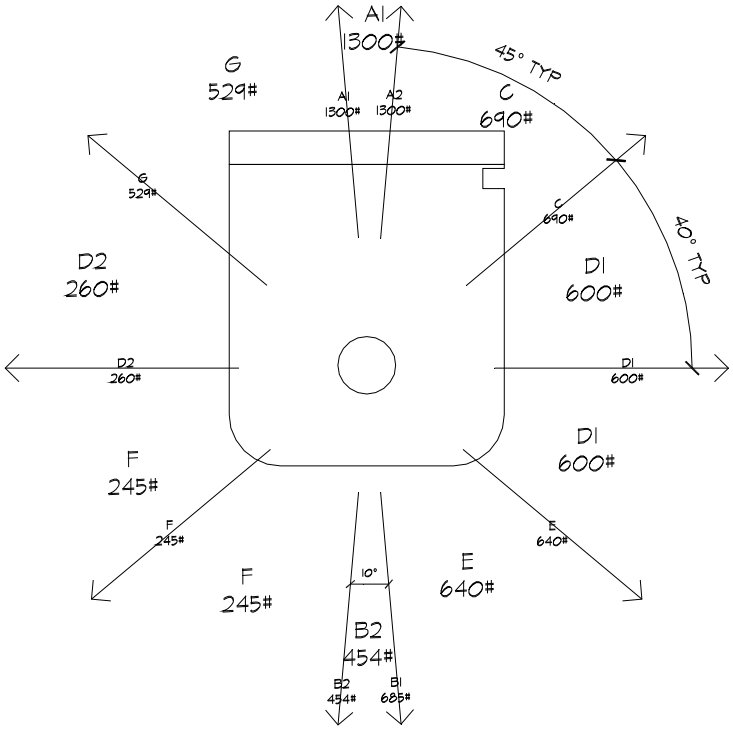

Figure 3. Loading Matrix

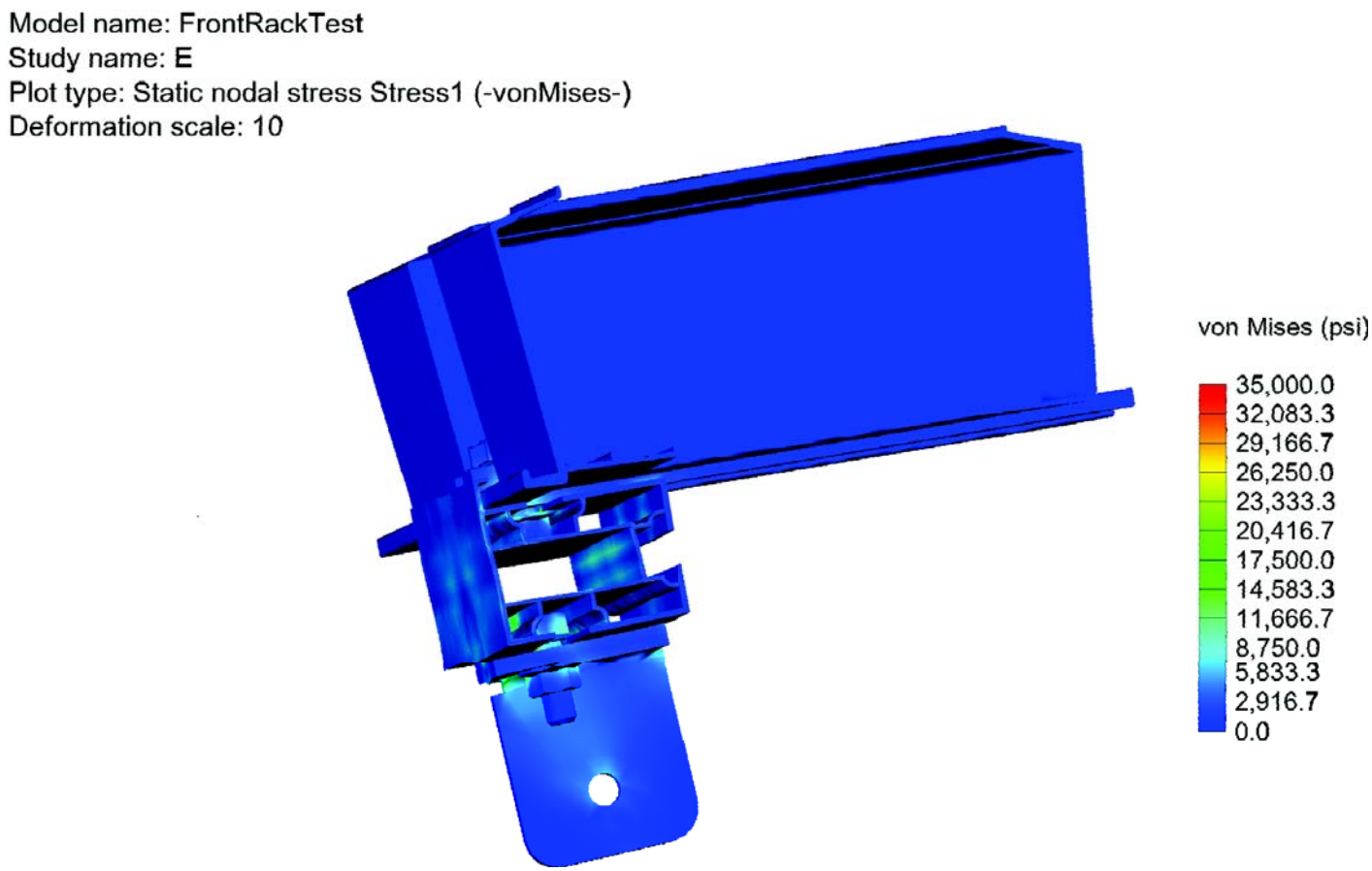

Figure 4. Stress State Case E

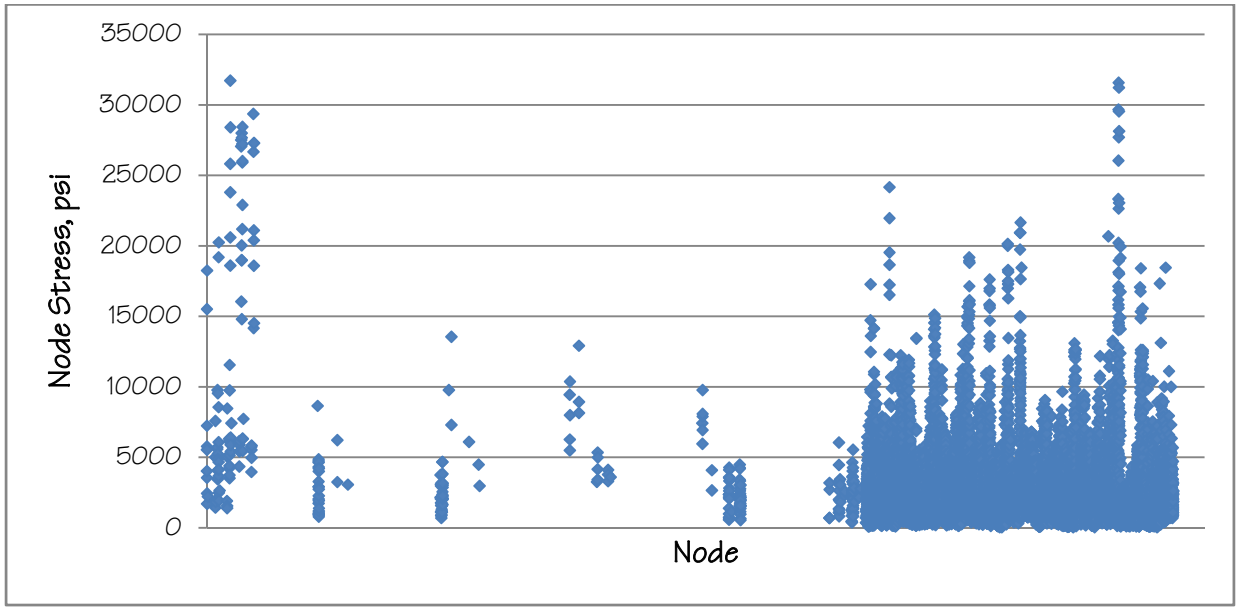

Figure 5. Node Stress Case E

Rail Mounting Foot Connection Capacity, Strength Level:

The rail mounting foot connection capacity is based on the bolt strength, the bearing stress in the pipe and mounting foot as well as block shear in the mounting foot. These capacities found below are quite a bit higher than other components of the racking and do not govern the allowable wind or snow load values.

Shear in bolt (double shear):

$\phi R_n = \phi(0.5)F_{ut}A_b = 2.97\ k$
$R_u(\max) = 2 * \phi R_n = 5.94\ k\ (double\ Shear)$

Where:

$\phi = 0.75$
$A_b = 0.11\ in^2$
$F_{tu} = 72$ ksi

Bearing Stress:

Compression (leg governs):

$\phi R_n = \phi F_{su}A_{brg} = 5.81\ k$

Where:

$\phi = 0.85$
$A_{brg} = (0.375")*(0.24") = 0.090\ in^2$
$F_{su} = 2* F_{tu} = 76$ ksi

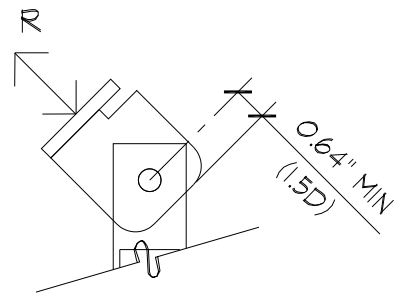

Figure 6 Rail mounting foot bearing

Tension(mounting foot governs):

$\phi R_n = \phi F_{su}A_{brg} = 4.55\ k$

Where:

$\phi = 0.85$
$A_b = (0.375")*(0.25") = 0.094\ in^2$
$F_{su} = 2* F_{tu}*(1.5/2) = 57$ ksi (edge distance 1.5*diameter)

Block Shear:

$\phi R_n = \phi \frac{F_{tu}}{\sqrt{3}} A_{nv} = 6.11\ k$

Where:

$\phi = 0.85$
$A_{nv} = (0.656")*(0.25")*2 = 0.328\ in^2$
$F_{tu} = 38$ ksi

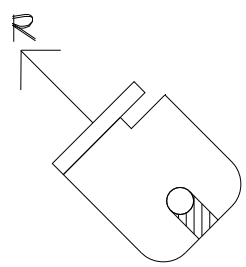

Figure 7 Rail mounting foot block shear

Governing

$\phi R_n = 5.81\ k$ Compression
$\phi R_n = 4.55\ k$ Tension

Aluminum Pipe Capacity Calculations

The calculations for aluminum member design on the following pages are used to determine the capacities of the Heliodyne Rack Structure legs (4" front leg and 47" and 67" rear legs). The first calculations are for axial loading and the next are for shear and bending. The resulting capacities were compared to the demands in the Reports. Interaction combinations were also checked according to ADM 2005 Section 4.1 as follows:

Combination 1: $\frac{f_a}{F_a} + \frac{C_{mx} f_{bx}}{F_{bx}\left(1 - \frac{f_a}{F_{ex}}\right)} \leq 1.0$

Combination 3 $\frac{f_{at}}{F_t} + \frac{f_{bx}}{F_{bx}} \leq 1.0$

Combination 2: $\frac{f_a}{F_{ao}} + \frac{f_{bx}}{F_{bx}} \leq 1.0$

Combination 4 $\frac{f_a}{F_a} + \left(\frac{f_{bx}}{F_{bx}}\right)^2 + \left(\frac{f_{sx}}{F_{sx}}\right)^2 \leq 1.0$

Aluminum Member Design Capacity-

All Leg's Axial Capacity

Alloy and Temper 6061-T6 Extrusions

Properties of 6061-T6 Extrusions

F_{tu} =	38	ksi	F_{su} =	24	ksi
F_{ty} =	35	ksi	F_{sy} =	20	ksi
F_{cy} =	35	ksi	E =	10,100	ksi
k_t =	1.0				

Section Heliodyne Rack Legs

Section Properties

O.D. (in)=	1.38	I (in^4) =	0.0951
I.D. (in) =	1.14	S (in^3) =	0.14
A (in^2) =	0.48	r (in) =	0.63
R_b (in) =	0.57	J (in^4) =	0.1855
t (in) =	0.12		

Section Heliodyne Rack - 67" Rear Leg

Section Properties

O.D. (in)=	1.50	I (in^4) =	0.2
I.D. (in) =	1.14	S (in^3) =	0.22
A (in^2) =	0.76	r (in) =	0.7
R_b (in) =	1.41	J (in^4) =	0.2
t (in) =	0.18		

Rear Leg Axial Capacity

L_b (in) =	46.8		B_c =	39.4	ksi	D_c^* =	13.1
kL/r =	74.3		D_c =	0.246	ksi	S_1^* =	0.335
λ =	1.39		C_c =	66.0		S_2^* =	1.24
ϕ_{cc} =	0.77		ϕ_u =	0.85			
ϕF_L =	16.4	ksi					
F_e =	14.0	ksi					
ϕ_y =	0.95						

ϕC =	7.9	kip
ϕC_e =	6.7	kip
ϕT_n =	15.5	kip

Rear Leg Axial Capacity - 67" Rear Leg

L_b (in) =	67		B_c =	39.4	ksi	D_c^* =	13.1
kL/r =	101.4		D_c =	0.246	ksi	S_1^* =	0.335
λ =	1.9		C_c =	66.0		S_2^* =	1.24
ϕ_{cc} =	0.85						
ϕF_L =	8.2	ksi					
F_e =	8.2	ksi					

ϕC =	6.2	kip
ϕC_e =	6.2	kip
ϕT_n =	24.4	kip

Front Leg Axial Capacity

L_b (in) =	5	
kL/r =	8.7	
λ =	0.16	
ϕ_{cc} =	0.95	
ϕF_L =	33.3	ksi
F_e =	1248.0	ksi

ϕC =	16.0	kip
ϕC_e =	599.1	kip
ϕT_n =	15.5	kip

Aluminum Member Design Capacity - Bending & Shear Front Leg

Alloy and Temper 6061-T6 Extrusions

Properties of 6061-T6 Extrusions

F_{tu} =	38	ksi	F_{su} =	24	ksi
F_{ty} =	35	ksi	F_{sy} =	20	ksi
F_{cy} =	35	ksi	E =	10,100	ksi
k_t =	1.0				

Section Heliodyne Rack Legs

Section Properties

O.D. (in)=	1.38	I (in^4) =	0.1
I.D. (in) =	1.14	S (in^3) =	0.14
A (in^2) =	0.48	r (in) =	0.63
R_b (in) =	0.63	J (in^4) =	0.19
t (in) =	0.12		

Shear in Round Tubes

ϕ_y =	0.95
ϕ_v =	0.80
ϕ_{vp} =	0.90
B_s =	25.80
D_s =	0.13
h/t =	12.08
S_1 =	28.63
S_2 =	50.0

for h/t < S_1, ϕF_{sy} = 19.0 ksi

S_1 < h /t < S_2, ϕF_L = N/A ksi

S_2 < h/t , ϕF_L = N/A ksi

Tension in Extreme Fibers, Round & Oval Tubes

$\phi F_L = 1.17^*\phi_y F_{ty}$ =	38.9	ksi
OR		
$\phi F_L = 1.24^*\phi_u F_{tu}/k_t$ =	40.1	ksi
ϕ_y =	0.95	
ϕ_u =	0.85	
ϕF_L =	38.9	ksi
$S_x\phi F_L$ =	5.3	kip-in

Compression in Beams, Extreme Fiber, Gross Section - Round Tubes

L_b (in) =	3				
R_b/t (in)=	5.3				
ϕ_y =	0.95		ϕ_{cp} =	0.8	
$\phi_b = \phi_c$ =	0.85				
$1.17^*\phi_y F_{cy}$ =	38.9	ksi			
B_{tb} =	64.8	ksi	B_t =	43.2	ksi
D_{tb} =	4.5	ksi	D_t =	1.558	ksi
C_{tb} =	55.0		C_t =	141.0	
S_1 =	18.23				
S_2 =	55.5				
for R_b /t < S_1, $1.17^*\phi F_{cy}$ =	38.9	ksi			
S_1 < R_b /t < S_2, ϕF_L =	N/A	ksi			
S_2 < R_b /t , ϕF_L =	N/A	ksi			

ϕF_S =	19.0	ksi
ϕV_n =	4.6	kip

ϕF_L =	38.9	ksi
$S_x\phi F_L$ =	5.3	kip-in
ϕM_n =	5.3	kip-in
ϕM_n =	0.44	kip-ft

Aluminum Member Design Capacity - Bending & Shear Rear Leg (47")

Alloy and Temper 6061-T6 Extrusions

Properties of 6061-T6 Extrusions

F_{tu} =	38	ksi	F_{su} =	24	ksi
F_{ty} =	35	ksi	F_{sy} =	20	ksi
F_{cy} =	35	ksi	E =	10,100	ksi
k_t =	1.0				

Section Heliodyne Rack Legs

Section Properties

O.D. (in)=	1.38	I (in^4) =	0.1
I.D. (in) =	1.14	S (in^3) =	0.14
A (in^2) =	0.48	r (in) =	0.63
R_b (in) =	0.63	J (in^4) =	0.19
t (in) =	0.12		

Shear in Round Tubes

ϕ_y =	0.95
ϕ_v =	0.80
ϕ_{vp} =	0.90
B_s =	25.80
D_s =	0.13
h/t =	24.03
S_1 =	28.63
S_2 =	50.0

for h/t < S_1, ϕF_{sy} = 19.0 ksi

S_1 < h /t < S_2, ϕF_L = N/A ksi

S_2 < h/t , ϕF_L = N/A ksi

Tension in Extreme Fibers, Round & Oval Tubes

$\phi F_L = 1.17^*\phi_y F_{ty}$ =	38.9	ksi
OR		
$\phi F_L = 1.24^*\phi_u F_{tu}/k_t$ =	40.1	ksi
ϕ_y =	0.95	
ϕ_u =	0.85	
ϕF_L =	38.9	ksi
$S_x\phi F_L$ =	5.3	kip-in

Compression in Beams, Extreme Fiber, Gross Section - Round Tubes

L_b (in) =	47				
R_b/t (in)=	5.3				
ϕ_y =	0.95		ϕ_{cp} =	0.8	
$\phi_b = \phi_c$ =	0.85				
$1.17^*\phi_y F_{cy}$ =	38.9	ksi			
B_{tb} =	64.8	ksi	B_t =	43.2	ksi
D_{tb} =	4.5	ksi	D_t =	1.558	ksi
C_{tb} =	55.0		C_t =	141.0	
S_1 =	18.23				
S_2 =	55.5				
for R_b /t < S_1, $1.17^*\phi F_{cy}$ =	38.9	ksi			
S_1 < R_b /t < S_2, ϕF_L =	N/A	ksi			
S_2 < R_b /t , ϕF_L =	N/A	ksi			

ϕF_S =	19.0	ksi
ϕV_n =	4.6	kip

ϕF_L =	38.9	ksi
$S_x\phi F_L$ =	5.3	kip-in
ϕM_n =	5.3	kip-in
ϕM_n =	0.44	kip-ft

Aluminum Member Design Capacity - Bending & Shear Rear Leg (67")

Alloy and Temper 6061-T6 Extrusions

Properties of 6061-T6 Extrusions

F_{tu} =	38	ksi	F_{su} =	24	ksi
F_{ty} =	35	ksi	F_{sy} =	20	ksi
F_{cy} =	35	ksi	E =	10,100	ksi
k_t =	1.0				

Section Heliodyne Rack Legs

Section Properties

O.D. (in)=	1.50	I (in^4) =	0.17
I.D. (in) =	1.14	S (in^3) =	0.22
A (in^2) =	0.76	r (in) =	0.66
R_b (in) =	1.41	J (in^4) =	0.19
t (in) =	0.18		

Shear in Round Tubes

ϕ_y =	0.95
ϕ_v =	0.80
ϕ_{vp} =	0.90
B_s =	25.80
D_s =	0.13
h/t =	27.56
S_1 =	28.63
S_2 =	50.0

for h/t < S_1, ϕF_{sy} = 19.0 ksi

S_1 < h /t < S_2, ϕF_L = N/A ksi

S_2 < h/t , ϕF_L = N/A ksi

Tension in Extreme Fibers, Round & Oval Tubes

$\phi F_L = 1.17^*\phi_y F_{ty}$ =	38.9	ksi
OR		
$\phi F_L = 1.24^*\phi_u F_{tu}/k_t$ =	40.1	ksi
ϕ_y =	0.95	
ϕ_u =	0.85	
ϕF_L =	38.9	ksi
$S_x\phi F_L$ =	8.4	kip-in

Compression in Beams, Extreme Fiber, Gross Section - Round Tubes

L_b (in) =	67				
R_b/t (in)=	7.8				
ϕ_y =	0.95		ϕ_{cp} =	0.8	
$\phi_b = \phi_c$ =	0.85				
$1.17^*\phi_y F_{cy}$ =	38.9	ksi			
B_{tb} =	64.8	ksi	B_t =	43.2	ksi
D_{tb} =	4.5	ksi	D_t =	1.558	ksi
C_{tb} =	55.0		C_t =	141.0	
S_1 =	18.23				
S_2 =	55.5				
for R_b /t < S_1, $1.17^*\phi F_{cy}$ =	38.9	ksi			
S_1 < R_b /t < S_2, ϕF_L =	N/A	ksi			
S_2 < R_b /t , ϕF_L =	N/A	ksi			

ϕF_S =	19.0	ksi
ϕV_n =	7.2	kip

ϕF_L =	38.9	ksi
$S_x\phi F_L$ =	8.4	kip-in
ϕM_n =	8.4	kip-in
ϕM_n =	0.70	kip-ft

Pedestal Foot Capacity Analysis

Analysis of the pedestal foot was performed with a set of loads much higher than those governing the system as a whole. Table 3 and Figure 8 show the input loads and the corresponding maximum stress. Figure 9 is a sample stress state of the pedestal and feet, with Figure 10 showing a plot of the corresponding stress state.

Table 3. Foot Analysis Input

Case 1		Case 2		Case 3			Case 4	Case 5
T(k)	V (k)	C (k)	V (k)	C (k)	V (k)		T (k)	C (k)
0.08	-0.84	0.31	0.75	0.49	0.59		1.58	1.96
Max Stress (ksi)	24.3	Max Stress	23.4	Max Stress (ksi)	16.6	Max Stress (ksi)	8.8	18.9

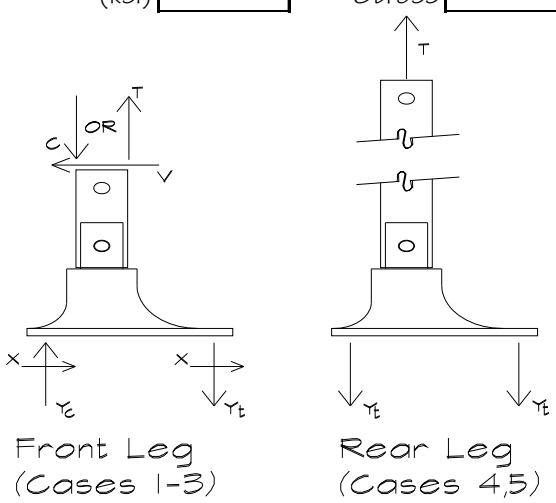

Figure 8. Foot Capacity Analysis Input

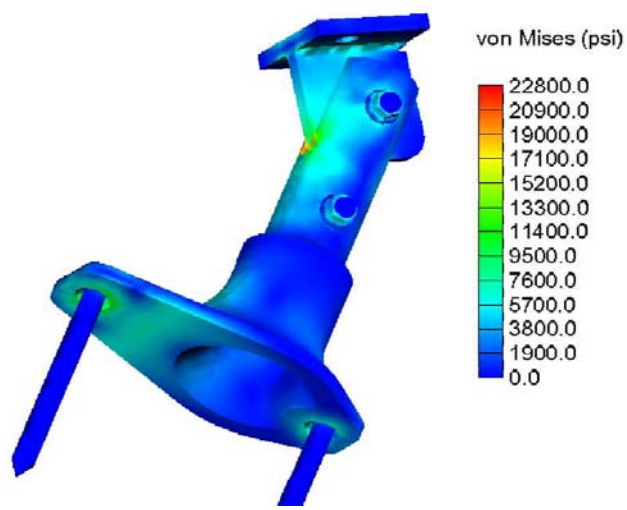

Figure 9. Stress State Case 2

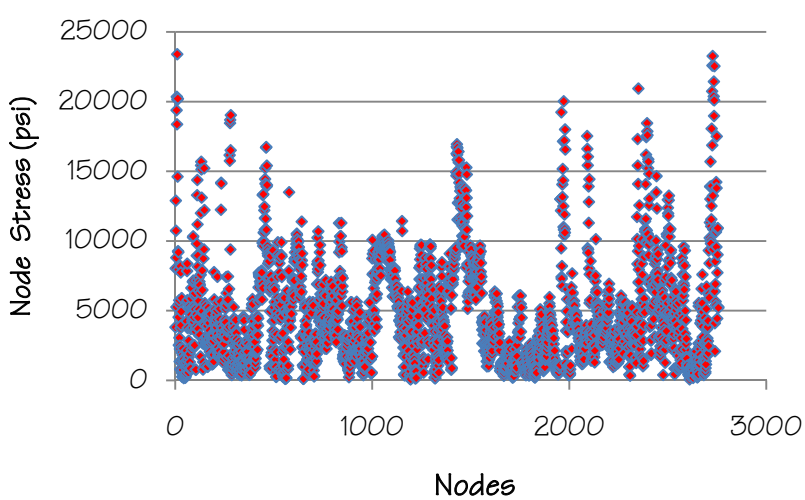

Figure 10. Node Stress Plot

Pedestal Foot Fastener Capacity

Due to the limitless possibilities for anchoring the pedestal foot, it is the responsibility of the Engineer of Record for the installation to design the anchorage. However, one design has been included in the Reports. The fastener's capacity calculations correspond to (2) 3/8" diameter lag bolts with a minimum 3" effective thread length (not including tapered end) into a Douglas Fir-Larch (N) member, according to the 2005 National Design Specification for Wood Construction. The required edge distance is 1-1/2" and the required end distance is 2-5/8" both measured from the centerline of the lag bolts. All of the service level reactions from the analysis have been compared to the calculated allowable combined withdrawal and shear of the fasteners

The following page shows the calculation, with Table 3 providing allowable loads for an array of loading angles and Figure 11 showing the loading.

Allowable Stress Design Fastener Capacity

C_d =	1.6	
$Z_{(perp)}$(#) =	180	(NDS Table 11K; G = 0.49 t_s = 1/4")
Z' (#) =	288	(NDS Table 10.3.1)
$L_{(thread)}$ (in) =	3	
W (#/in) =	296	(NDS Table 11.2A ; G = 0.49)
W'p (#)	1420.8	(NDS Table 10.3.1)

$$Z'_a = \frac{(W'p)Z'}{(W'p)\cos^2\alpha + Z'\sin^2\alpha}$$ NDS EQ (11.4-2)

Table 4. Allowable Combined

a (degrees)	Z'_a (#)
35	390
39	421
43	458
47	502
51	555
55	619
59	695
63	785
67	888
71	1003
75	1125

(1) Minimum edge distance = 1-1/2"
(2) Minimum end distance = 2-5/8".

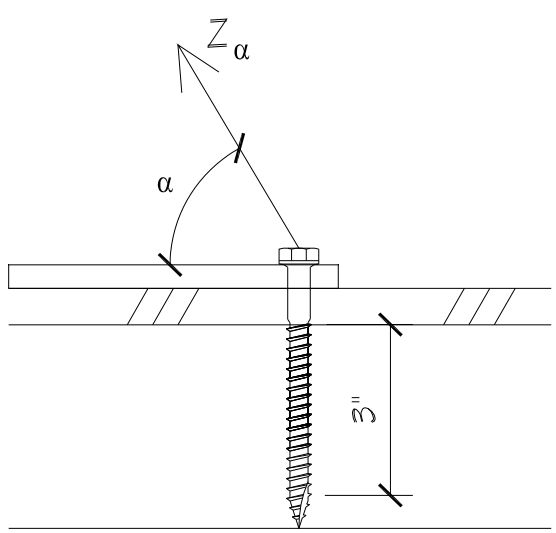

Figure 11. Combined Shear and Withdrawl